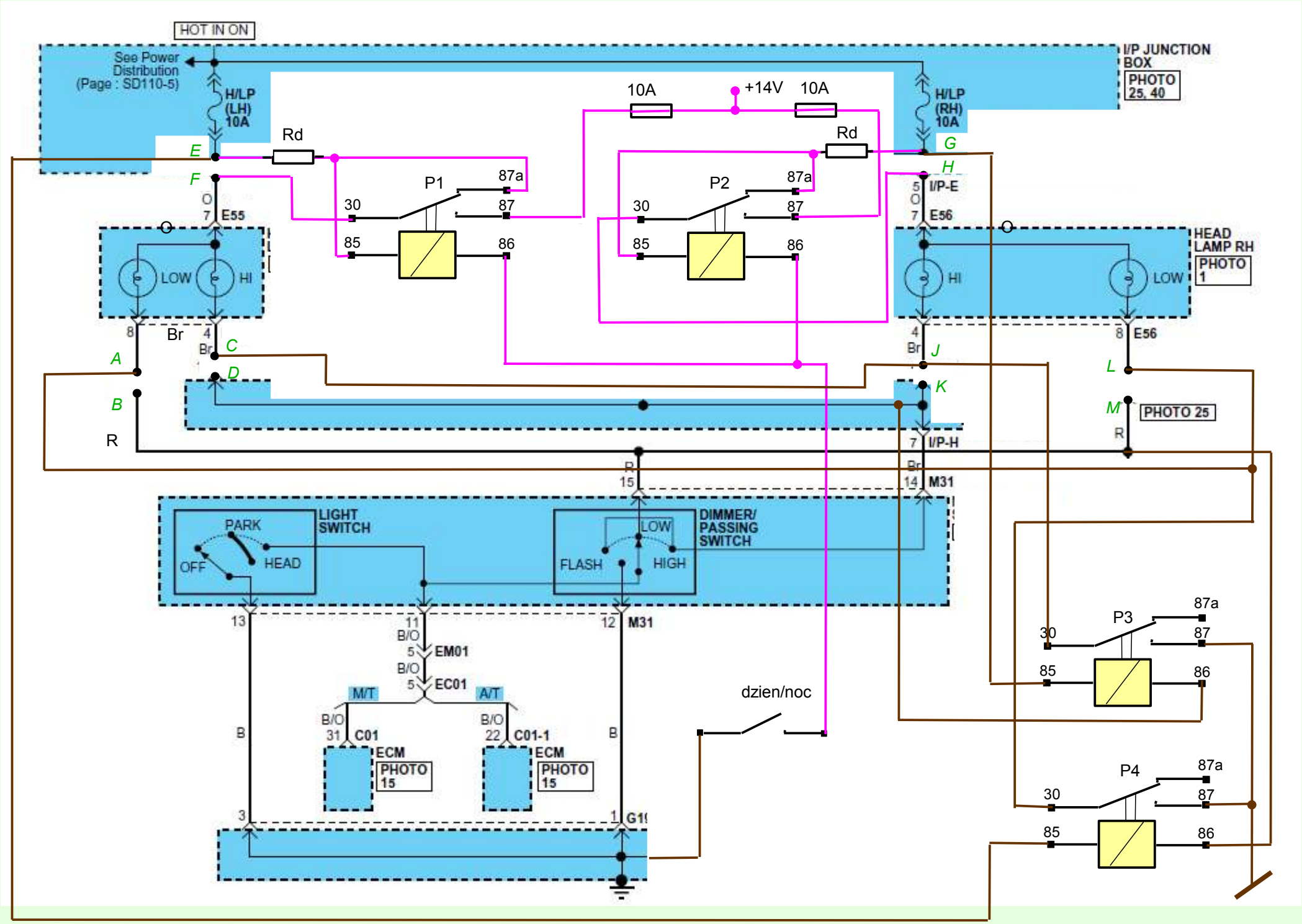
HOT IN ON
See Power Distribution (Page : SD110-5)
H/LP (LH) 10A
H/LP (RH) 10A
I/P JUNCTION BOX
PHOTO 25, 40
10A
+14V
10A
Rd
Rd
E
F
G
H
P1
P2
87a
87
30
85
86
I/P-E
E55
E56
LOW
HI
HEAD LAMP RH
PHOTO 1
Br
C
D
A
B
R
J
K
L
M
PHOTO 25
I/P-H
M31
LIGHT SWITCH
PARK
OFF
HEAD
DIMMER/ PASSING SWITCH
LOW
FLASH
HIGH
B/O
EM01
EC01
M/T
A/T
C01
C01-1
ECM
PHOTO 15
dzien/noc
P3
P4