MFI CONTROL SYSTEM (M/T) (1)

SD313-1

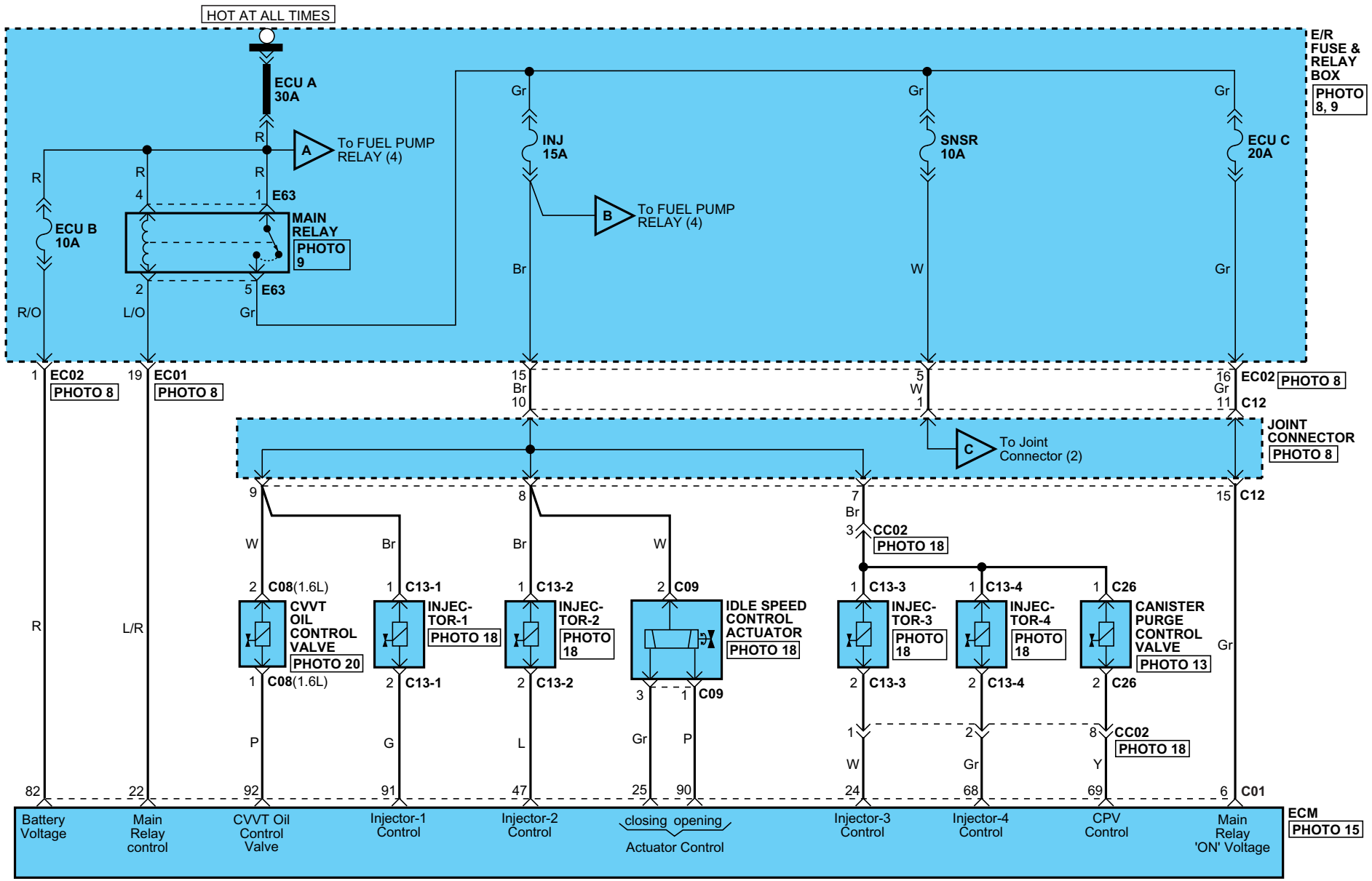

L2JF313A